Size		CLASS150		JIS 10K		PN10		PN16		A	B	ΦD	L	DOUBLE ACTING			
DN	NPS	D1	N-Φd1	D1	N-Φd1	D1	N-Φd1	D1	N-Φd1					H	L1	C	WT (kg)
32	1¼"	88.9	4-Φ15.9	100	4-Φ19	100	4-Φ19	100	4-Φ19	110	64	34. 6	33	263.5	139.5	71	1.4
40	1½"	98.5	4-Φ15.9	105	4-Φ19	110	4-Φ19	110	4-Φ19	120	70	43	33	279.5	139.5	71	2.6
50	2"	120.6	4-Φ19.1	120	4-Φ19	125	4-Φ19	125	4-Φ19	140	80	52. 9	42	309.5	139.5	71	3.9
65	2½"	139.7	4-Φ19.1	140	4-Φ19	145	4-Φ19	145	4-Φ19	150	89	64. 5	45	339.5	162	80.5	4.9
80	3"	152.4	8-Φ19.1	150	8-Φ19	160	8-Φ19	160	8-Φ19	158	95	78. 8	46	353.5	162	80.5	5.3
100	4"	190.5	8-Φ19.1	175	8-Φ19	180	8-Φ19	180	8-Φ19	176	114	104	52	407	207	95	7.4
125	5"	215.9	4-Φ22.4	210	4-Φ23	210	4-Φ23	210	4-Φ19	190	127	123. 3	55	445.5	237.5	106	10.2
150	6"	241.3	4-Φ22.4	240	4-Φ23	240	4-Φ23	240	4-Φ23	211	139	155. 1	56	491.5	271.5	123	13.5
200	8"	298.5	4-Φ22.4	290	4-Φ23	295	4-Φ23	295	4-Φ23	235	175	202. 5	61	586.5	328	137	20.5
250	10"	316.9	4-Φ25.4	355	4-Φ25	350	4-Φ23	355	4-Φ28	265	203	250. 5	66	651.5	366	148	29.2
300	12"	431.8	4-Φ25.4	400	4-Φ25	400	4-Φ23	410	4-Φ25	305	242	301. 5	77	753	428	164	41.4
350	14"	476	4-Φ28.5	445	4-Φ25	460	4-Φ23	470	4-Φ28	368	267	333. 3	77	857	430	186.5	57.0
400	16"	539.5	4-Φ28.5	510	4-Φ27	515	4-Φ28	525	4-Φ31	400	309	389. 6	102	961	482	204	91.9
450	18"	578	4-Φ32	565	4-Φ27	565	4-Φ28	585	4-Φ31	422	328	440. 5	114	1024	532	224	118.8

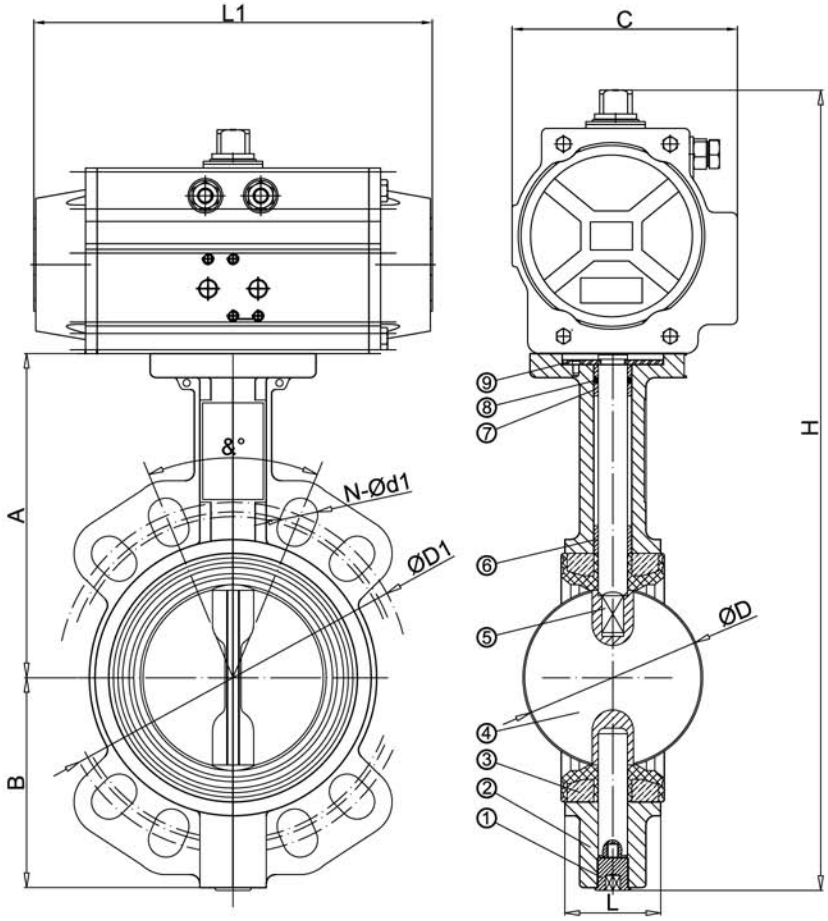

APPLICABLE STANDARDS & TECHNICAL NOTES:				
DESIGN CODM		API609		
INSPECTION&TEST		API598		
END STANDARD		ANSI 150#/JIS10K		
FACE TO FACE		API609		
9	THRUST INSERT	CARBON STEEL	1	
8	O-RING	NBR	2	
7	SHORT BUSHING	PTFE	1	
6	LONG BUSHING	PTFE	1	
5	STEM	SS416	2	
4	DISC	WCB/DI+NYLON/CF8/CF8M	1	
3	SEAT	EPDM	1	
2	BODY	DI/WCB/CF8/CF8M	1	
1	TOP SILK	CARBON STEEL	1	
NO.	PARTS NAME	MATERIAL	QTY	NOTE

TEST PRESSURE		
	SHELL	SEAL
HYDROSTATIC	24/15 kg/cm^2	17.6/11 kg/cm^2
AIR	/	/

TITLE:WAFER BUTTERFLY VALVE
DN32-DN450

					DWG NO:FT0114000003-1.1			
1	2006.2.1	ZhuHui	Brian	Sky Tang				
REV	Date	DRN	CHK	APRV	SCALE		UNIT	mm